CYF4L6-60V – 4 mm² Screw Clamp Fuse Terminal Block with 6-60V LED Indication in Grey Colour

Connectwell CY series · screw clamp · fuse

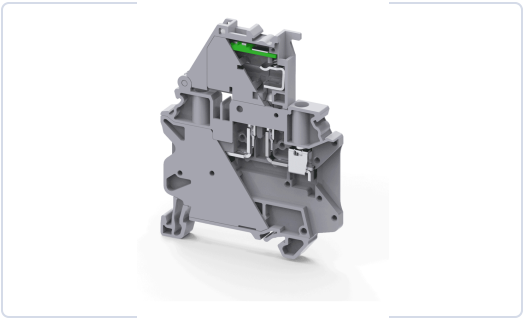

4 mm² Screw Clamp Fuse Terminal Block with 6-60V LED Indication in Grey Colour. Rated 10 A at 1000 V (IEC). Takes wire up to 4 mm² stranded.

CURRENT (IEC)	VOLTAGE (IEC)	WIRE (STRANDED)
10 A	**1000 V**	**0.2 – 4 mm²**

WIRE (AWG)	WIDTH	LEVELS / CONNECTIONS
24 – 12 AWG	**6 mm**	**1 / 2**

1 Choose your colour

Colour	Part number	Standard pack
Grey	**CYF4L6-60V**	50 pcs
Black	**CYF4L6-60VBK**	50 pcs
Blue	**CYF4L6-60VBU**	50 pcs

Prices on request. Full standard packs get our best pricing. Part numbers are Connectwell numbers.

2 Technical data

Electrical	
Rated voltage (IEC)	1000 V
Rated current (IEC)	10 A
Tightening torque (IEC)	0.5 Nm
Rated voltage (UL / CSA)	600 V
Rated current (UL / CSA)	10 A
Tightening torque (UL / CSA)	4.5 lb-in
Rated surge voltage	6 kV
Overvoltage category	III
Pollution degree	3
Short-time withstand current	0.48 kA

Wire connection	
Connection	Screw Clamp
Wire entry	Side
Solid conductor	0.2 mm² to 6 mm²
Stranded conductor	0.2 mm² to 4 mm²
Stranded with ferrule	0.2 mm² to 4 mm²
Two conductors, twin ferrule	0.2 mm² to 1.5 mm²
AWG range	24 AWG to 12 AWG
Stripping length	10 mm
Screw	M3
Operated with	Screwdriver

Mechanical	
Width (thickness)	6 mm
Length	58.8 mm
Height on 35 x 7.5 mm rail	72.4 mm
Height on 35 x 15 mm rail	79.9 mm
Mounting	DIN 35/DIN 35-15 Rail
Weight	16.3 g

Material	
Housing	Polyamide
Flammability (UL 94)	V0
Operating temperature	-40 to +105 °C
Country of origin	India

Standards and certificates: UL 1059 (UL E220514-20131226) · **CSA C22.2 No. 158:23** (CSA 70115062) · **IEC 60947-7-3** (UL)

3 Add the accessories



JUMPER
JX4/2
Pluggable Type Jumper, 2 Pole, Insulated, in Orange Colour
Standard pack: 100 pcs



JUMPER
JX4/8
Pluggable Type Jumper, 8 Pole, Insulated, in Orange Colour
Standard pack: 10 pcs



JUMPER
JX2.5/11/8
Pluggable Type Jumper, 8 Pole, Insulated, in Orange Colour (also: JX4/3, JX4/4, JX4/5, JX4/6, JX4/10, JX4/16, JX2.5/11/2)
Standard pack: on request



END CLAMP
CA702
End Clamp with DIN rail clamping screw suitable for DIN32 and DIN35 Type DIN Rails in Grey Colour
Standard pack: 50 pcs



END CLAMP
CA802
End Clamp with DIN rail clamping screw suitable for DIN35 Type DIN Rails in Grey Colour
Standard pack: 50 pcs

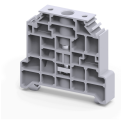

END CLAMP
CA202
End Clamp with center DIN rail clamping screw suitable for DIN35 Type DIN Rails in Grey Colour
Standard pack: 25 pcs

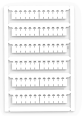

MARKER CARD
MC6
Marker Card (Blank) suitable for 6mm width Terminal Blocks with 72 Tags
Standard pack: 1 packet (10 cards)

SCREWDRIVER
SCS0.6/3.5
Electrician's Screwdriver with 0.6x3.5mm Blade Size suitable for operating Screw, Spring and Push-in Type Terminal blocks
Standard pack: 10 pcs

Request a quote

How to order: choose the part numbers above, note the quantity, and send them to us. Quote the standard pack size or a multiple of it for our best price.
289-236-5064 · info@eklecmatic.ca · www.eklecmatic.ca

Connectwell® is a trademark of Connectwell Industries Pvt. Ltd. Product data from Connectwell (connectwell.com and the Connectwell catalogue 2025-26); subject to change – please confirm before ordering.

Manufacturer's catalogue page (Connectwell catalogue 2025-26): ordering data and accessories as printed by Connectwell.

CY SERIES SCREW CLAMP TERMINAL BLOCKS

FUSE TERMINAL BLOCKS

These Terminal Blocks are used in electrical and control systems which require fuse protection.

CYF4 series fuse terminals have a thickness of 6 mm with a provision for using pluggable Jumpers. These Terminal Blocks are completely closed type and do not need separate end plate.

Alternate CYF4 terminals with CYK2.5N can be shorted with help of JX2.5 pluggable jumpers.

CYDLF4LR is modified version of CYDLF4 where two equi-potential connection joints are available on both side of the Terminal Block.

CYTLF2.5 is a three level Fuse Terminal Block with fuse carrier on top level and feed through function on the middle and bottom level.

CYTLGF2.5 is a three level Fuse Terminal Block with fuse carrier on top level and feed through function on the middle and bottom level. An additional ground connection is available for connecting grounding wires.

The terminals with Ex & IECEx approval can be used in potentially explosive atmosphere. For detailed information refer page 303.

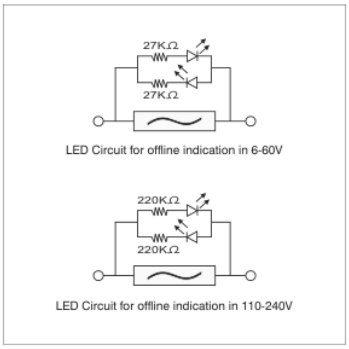

CYF4

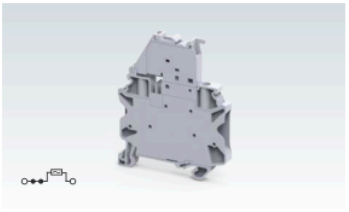

Width (Thickness) x Length		6 x 58.8 mm		
Height with DIN 35 x 7.5 / 35 x 15 / 32 mm Rail		72.4 mm / 79.9 mm		
Connection Possibility as per		IEC		UL - CSA
With 1 Conductor per clamp	Stranded / Flexible	0.2 - 4.0 mm²		24 - 10 AWG
	Solid	0.2 - 6.0 mm²		
	with Ferrule / Lug	0.2 - 4.0 mm²		24 - 12 AWG
With 2 same size Conductors per clamp	Stranded / Flexible	0.2 - 1.5 mm²		24 - 16 AWG
	with TWIN Ferrule / Lug	0.5 - 2.5 mm²		20 - 14 AWG
Wire Stripping Length		9 mm		
Ratings As Per		IEC60947-7-3	UL-1059	CSA22.2-158 IEC60079
Voltage		1000 V	600 V	600 V 630 V
Current	Fuse Level	10 A	10 A	10 A 10 A
	Feed Through Level			
Torque		0.5 Nm	4.5 lb-in	4.5 lb-in 0.5 Nm
Approvals				
Insulation Material / Material Group		Polyamide 6,6 / 1		
Rated Impulse Voltage / Pollution Degree		6 KV / 3		
Fuse Size		Ø5 x 20 mm		

		Type / Cat. No.	Standard Pack
Terminal Block	Grey	CYF4	50
	Blue	CYF4BU	50
	With LED for 6 - 60 V AC/DC	CYF4L6-60V	50
	With LED for 10 - 36 V AC/DC	CYF4L10-36V	50
	With LED for 110 - 240 V AC/DC	CYF4L110-240V	50
	For Ex (e) Applications	CYF4EX*	50
	For Ex (i) Applications	CYF4BUEX*	50
Mounting Rail (Refer Pg. 279 for details)		CA701-1M / CA701-1M-S	50 m
		CA701-15-1M / CA701-15-1M-S	25 m
End Clamp (Refer Pg. 280 for details)		CA702 / CA802	50
Marking Tag (Refer Pg. 286 for details)		MC6	10
Screw Driver		SCS0.6/3.5 Blade size: 0.6 x 3.5 mm	10

Jumpers		Type / Cat. No.	Imax	Standard Pack
Pluggable Jumpers	2 pole	JX4/2	32 A	100
	3 pole	JX4/3	32 A	50
	4 pole	JX4/4	32 A	50
	5 pole	JX4/5	32 A	50
	6 pole	JX4/6	32 A	50
	8 pole	JX4/8	32 A	10
	10 pole	JX4/10	32 A	10
	16 pole	JX4/16	32 A	10
Alternate Jumpers	2 pole	JX2.5/11/2	24 A	10
	8 pole	JX2.5/11/8	24 A	10

* Also available in LED variants