CY16 – 16 mm² Screw Clamp Feed-through Terminal Block in Grey Colour

Connectwell CY series · screw clamp · feed-through

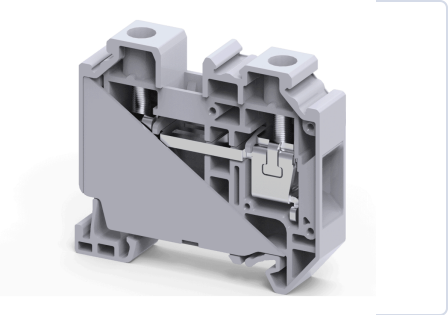

16 mm² Screw Clamp Feed-through Terminal Block in Grey Colour. Rated 41 A at 1000 V (IEC). Takes wire up to 16 mm² stranded.

CURRENT (IEC)	VOLTAGE (IEC)	WIRE (STRANDED)
41 A	**1000 V**	**1.5 – 16 mm²**
WIRE (AWG)	**WIDTH**	**LEVELS / CONNECTIONS**
16 – 4 AWG	**12.0 mm**	**1 / 2**

1 Part number

Colour	Part number	Standard pack
Grey	**CY16**	50 pcs

Prices on request. Full standard packs get our best pricing. Part numbers are Connectwell numbers.

2 Technical data

Electrical	
Rated voltage (IEC)	1000 V
Rated current (IEC)	41 A
Tightening torque (IEC)	2.5 Nm
Rated voltage (UL / CSA)	600 V
Rated current (UL / CSA)	85 A
Tightening torque (UL / CSA)	14 lb-in
Rated surge voltage	8 kV
Overvoltage category	III
Pollution degree	3

Wire connection	
Connection	Screw Clamp
Wire entry	Side
Stranded conductor	1.5 mm² to 16 mm²
Stranded with ferrule	1.5 mm² to 16 mm²
Two conductors, twin ferrule	0.5 mm² to 10 mm²
AWG range	16 AWG to 4 AWG
Stripping length	14 mm
Screw	M4
Operated with	Screwdriver

Mechanical	
Width (thickness)	12.0 mm
Length	58.9 mm
Height on 35 x 7.5 mm rail	50.8 mm
Height on 35 x 15 mm rail	51.2 mm
Mounting	DIN 35-7.5/DIN 35-15 Rail
Weight	31.05 g

Material	
Housing	Polyamide
Flammability (UL 94)	V0
Operating temperature	-40..+105 °C °C
Country of origin	India

Standards and certificates: UL 1059 (null E220514-20230710) · **IEC 60947-7-1** (null UL TEC - 02368)

3 Add the accessories

JUMPER
JY16/2
Pluggable Type Jumper, 2 Pole, Insulated, in Orange Colour
Standard pack: 10 pcs



END CLAMP
CA702
End Clamp with DIN rail clamping screw suitable for DIN32 and DIN35 Type DIN Rails in Grey Colour
Standard pack: 50 pcs



END CLAMP
CA802
End Clamp with DIN rail clamping screw suitable for DIN35 Type DIN Rails in Grey Colour
Standard pack: 50 pcs



MARKER CARD
MC12
Marker Card (Blank) suitable for 12mm width Terminal Blocks with 36 Tags
Standard pack: 1 packet (10 cards)

SCREWDRIVER
SCS1/5.5
Electrician's Screwdriver with 1x5.5mm Blade Size suitable for operating Screw, Spring and Push-in Type Terminal blocks
Standard pack: on request

Request a quote

How to order: choose the part numbers above, note the quantity, and send them to us. Quote the standard pack size or a multiple of it for our best price.
289-236-5064 · info@eklecmatic.ca · www.eklecmatic.ca

Connectwell® is a trademark of Connectwell Industries Pvt. Ltd. Product data from Connectwell (connectwell.com and the Connectwell catalogue 2025-26); subject to change – please confirm before ordering.

Manufacturer's catalogue page (Connectwell catalogue 2025-26): ordering data and accessories as printed by Connectwell.

CY SERIES SCREW CLAMP TERMINAL BLOCKS

FEED THROUGH TERMINAL BLOCKS

CY series screw clamp Terminal Blocks are the next generation terminals with an improved 1000 V rating as per IEC guidelines. Feed through terminals of different wire sizes have the same outer profile.

Cross connection of these Terminal Blocks can be done using insulated pluggable jumpers, available in various pole configurations.

The terminals with Ex & IECEx approval can be used in potentially explosive atmosphere. For detailed information refer page 303.

CY16

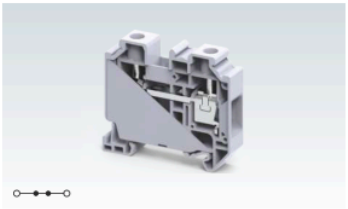

Width (Thickness) x Length			12 x 58.9 mm	
Height with DIN 35 x 7.5 / 35 x 15 mm Rail			50.8 mm / 51.2 mm	
Connection Possibility as per			IEC	UL - CSA
With 1 Conductor per clamp	Stranded / Flexible		1.5 - 16.0 mm²	16 - 4 AWG
	Solid			
	with Ferrule / Lug		1.5 - 16.0 mm²	16 - 4 AWG
With 2 same size Conductors per clamp	with TWIN Ferrule / Lug		0.5 - 10.0 mm²	
Wire Stripping Length			14 mm	
Ratings As Per			IEC60947-7-1	UL-1059 IEC60079
Voltage			1000 V	600 V 630 V
Current			76 A	85 A 68 A
Torque			2.5 Nm	14 lb.in 2.5 Nm
Approval				
Insulation Material / Material Group			Polyamide 6.6 / 1	
Rated Impulse Voltage / Pollution Degree			8 KV / 3	

		Type / Cat. No.	Standard Pack
Terminal Block	Grey	CY16	50
	Ground / Earth	CYG16 (Refer Pg. 126 for details)	50
	For Ex (e) Applications	CY16EX	50
	For Ex (i) Applications	CY16BUEX	50
Mounting Rail (Refer Pg. 279 for details)		CA701-1M / CA701-1M-S	50 m
		CA701-15-1M / CA701-15-1M-S	25 m
End Clamp (Refer Pg. 280 for details)		CA702 / CA802	50
Marking Tag (Refer Pg. 286 for details)		MC12	10
Screw Driver		SCS1.0/5.5 Blade size: 1.0 x 5.5 mm	10

Jumpers		Type / Cat. No.	Imax	Standard Pack
Pluggable Jumpers	2 pole	JY16/2	76 A	20