# CY10 – 10 mm² Screw Clamp Feedthrough Terminal Block in Grey Colour

Connectwell CY series · screw clamp · feed-through

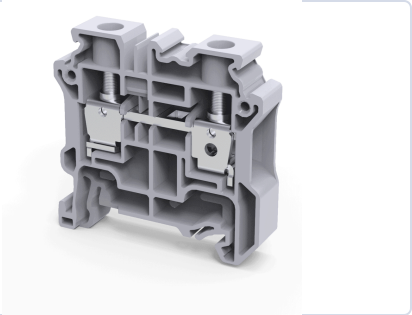

10 mm² Screw Clamp Feedthrough Terminal Block in Grey Colour. Rated 57 A at 1000 V (IEC). Takes wire up to 10 mm² stranded.

| CURRENT (IEC) | VOLTAGE (IEC) | WIRE (STRANDED) |
|---|---|---|
| **57 A** | **1000 V** | **0.2 – 10 mm²** |
| **WIRE (AWG)** | **WIDTH** | **LEVELS / CONNECTIONS** |
| **24 – 6 AWG** | **10 mm** | **1 / 2** |

## 1 Choose your colour

| Colour | Part number | Standard pack |
|---|---|---|
| Grey | **CY10** | 50 pcs |
| Beige | **CY10BG** | 50 pcs |
| Black | **CY10BK** | 50 pcs |
| Brown | **CY10BR** | 50 pcs |
| Blue | **CY10BU** | 50 pcs |
| Green | **CY10GN** | 50 pcs |
| Orange | **CY10O** | 50 pcs |
| Red | **CY10R** | 50 pcs |
| Yellow | **CY10Y** | 50 pcs |

Prices on request. Full standard packs get our best pricing. Part numbers are Connectwell numbers.

## 2 Technical data

| Electrical | |
|---|---|
| Rated voltage (IEC) | 1000 V |
| Rated current (IEC) | 57 A |
| Tightening torque (IEC) | 1.2 Nm |
| Rated voltage (UL / CSA) | 600 V |
| Rated current (UL / CSA) | 65 A |
| Tightening torque (UL / CSA) | 14 lb-in |
| Rated surge voltage | 8 kV |
| Overvoltage category | III |
| Pollution degree | 3 |
| Short-time withstand current | 1.2 kA |

| Wire connection | |
|---|---|
| Connection | Screw Clamp |
| Wire entry | Side |
| Stranded conductor | 0.2 mm² to 10 mm² |
| Stranded with ferrule | 0.2 mm² to 10 mm² |
| Two conductors, twin ferrule | 0.5 mm² to 6 mm² |
| AWG range | 24 AWG to 6 AWG |
| Stripping length | 11 mm |
| Screw | M4 |
| Operated with | Screwdriver |

| Mechanical | |
|---|---|
| Width (thickness) | 10 mm |
| Length | 50 mm |
| Height on 35 x 7.5 mm rail | 49 mm |
| Height on 35 x 15 mm rail | 56.5 mm |
| Mounting | DIN 35/DIN 35-15 Rail |
| Weight | 18.9 g |

| Material | |
|---|---|
| Housing | Polyamide |
| Flammability (UL 94) | V0 |
| Operating temperature | -40 to +105 °C |
| Country of origin | India |

**Standards and certificates: UL 1059** (UL E220514-20181220) · **CSA C22.2 No. 158:23** (CSA 70179396) · **IEC 60947-7-1** (UL 70179397)

## 3 Add the accessories



**END PLATE**
### EPCY2.5/10
End Plate suitable for Feedthrough (2.5 - 10sq.mm) series Terminal blocks in Grey Colour
Standard pack: 50 pcs



**PARTITION PLATE**
### PPCY2.5/10
Partiton Plate suitable for CY series (2.5 - 10sq.mm) Feedthrough Terminal Blocks in Grey Colour
Standard pack: 50 pcs

**JUMPER**
### JY10/2
Pluggable Type Jumper, 2 Pole, Insulated, in Orange Colour
Standard pack: 20 pcs



**END CLAMP**
### CA702
End Clamp with DIN rail clamping screw suitable for DIN32 and DIN35 Type DIN Rails in Grey Colour
Standard pack: 50 pcs



**END CLAMP**
### CA802
End Clamp with DIN rail clamping screw suitable for DIN35 Type DIN Rails in Grey Colour
Standard pack: 50 pcs



**MARKER CARD**
### MC10
Marker Card (Blank) suitable for 10mm width Terminal Blocks with 42 Tags
Standard pack: 1 packet (10 cards)

**SCREWDRIVER**
### SCS0.8/4
Electrician's Screwdriver with 0.8x4mm Blade Size suitable for operating Screw, Spring and Push-in Type Terminal blocks
Standard pack: 10 pcs

**Request a quote**

**How to order:** choose the part numbers above, note the quantity, and send them to us. Quote the standard pack size or a multiple of it for our best price.
**289-236-5064 · info@eklecmatic.ca · www.eklecmatic.ca**


Connectwell® is a trademark of Connectwell Industries Pvt. Ltd. Product data from Connectwell (connectwell.com and the Connectwell catalogue 2025-26); subject to change – please confirm before ordering.

Manufacturer's catalogue page (Connectwell catalogue 2025-26): ordering data and accessories as printed by Connectwell.

www.connectwell.com

| CY4 | CY6 | CY10 |
|---|---|---|
| 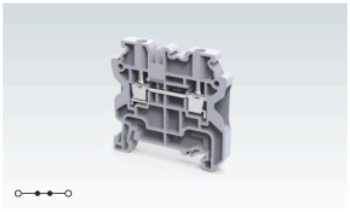 |  | 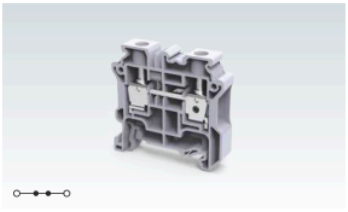 |
| 6 x 50 mm | 8 x 50 mm | 10 x 50 mm |
| 49 mm / 56.5 mm | 49 mm / 56.5 mm | 49 mm / 56.5 mm |

| IEC | UL - CSA |
|---|---|
| 0.2 - 4.0 mm² | 24 - 10 AWG |
| 0.2 - 6.0 mm² | |
| 0.2 - 4.0 mm² | 24 - 12 AWG |
| 0.5 - 2.5 mm² | 20 - 14 AWG |

| IEC | UL - CSA |
|---|---|
| 0.2 - 6.0 mm² | 24 - 8 AWG |
| 0.2 - 10.0 mm² | |
| 0.2 - 6.0 mm² | 24 - 8 AWG |
| 0.5 - 4.0 mm² | 20 - 12 AWG |

| IEC | UL - CSA |
|---|---|
| 0.2 - 10.0 mm² | 24 - 6 AWG |
| 0.2 - 10.0 mm² | 24 - 6 AWG |
| 0.5 - 6.0 mm² | |

| 9 mm | | | |
|---|---|---|---|
| IEC60947-7-1 | UL-1059 | CSA22.2-158 | IEC60079 |
| 1000 V | 600 V | 600 V | 800 V |
| 32 A | 30 A | 30 A | 28 A |
| 0.5 Nm | 4.5 lb.in | 4.5 lb.in | 0.5 Nm |

| 10 mm | | | |
|---|---|---|---|
| IEC60947-7-1 | UL-1059 | CSA22.2-158 | IEC60079 |
| 1000 V | 600 V | 600 V | 630 V |
| 41 A | 50 A | 50 A | 36 A |
| 0.8 Nm | 11 lb.in | 11 lb.in | 0.8 Nm |

| 11 mm | | | |
|---|---|---|---|
| IEC60947-7-1 | UL-1059 | CSA22.2-158 | IEC60079 |
| 1000 V | 600 V | 600 V | 630 V |
| 57 A | 65 A | 65 A | 51 A |
| 1.2 Nm | 14 lb.in | 14 lb.in | 1.2 Nm |

| Polyamide 6,6 / 1 |
|---|
| 8 KV / 3 |

| Type / Cat. No. | Standard Pack |
|---|---|
| CY4 | 100 |
| CY4BU | 100 |
| CY4R | 100 |
| CY4Y | 100 |
| CY4BK | 100 |
| CY4GN | 100 |
| CYG4 (Refer Pg. 125 for details) | 100 |
| CY4EX | 100 |
| CY4BUEX | 100 |
| EPCY2.5/10 | 50 |
| PPCY2.5/10 | 20 |
| CA701-1M / CA701-1M-S | 50 m |
| CA701-15-1M / CA701-15-1M-S | 25 m |
| CA702 / CA802 | 50 |
| MC6 | 10 |
| SCS0.6/3.5 Blade size: 0.6 x 3.0 mm | 10 |

| Type / Cat. No. | Standard Pack |
|---|---|
| CY6 | 100 |
| CY6BU | 100 |
| CY6R | 100 |
| CY6Y | 100 |
| CY6BK | 100 |
| CY6GN | 100 |
| CYG6 (Refer Pg. 126 for details) | 100 |
| CY6EX | 100 |
| CY6BUEX | 100 |
| EPCY2.5/10 | 50 |
| PPCY2.5/10 | 20 |
| CA701-1M / CA701-1M-S | 50 m |
| CA701-15-1M / CA701-15-1M-S | 25 m |
| CA702 / CA802 | 50 |
| MC8 | 10 |
| SCS0.8/4 Blade size: 0.8 x 4 mm | 10 |

| Type / Cat. No. | Standard Pack |
|---|---|
| CY10 | 50 |
| CY10BU | 50 |
| CY10R | 50 |
| CY10Y | 50 |
| CY10BK | 50 |
| CY10GN | 50 |
| CYG10 (Refer Pg. 126 for details) | 50 |
| CY10EX | 50 |
| CY10BUEX | 50 |
| EPCY2.5/10 | 50 |
| PPCY2.5/10 | 20 |
| CA701-1M / CA701-1M-S | 50 m |
| CA701-15-1M / CA701-15-1M-S | 25 m |
| CA702 / CA802 | 50 |
| MC10 | 10 |
| SCS0.8/4 Blade size: 0.8 x 4 mm | 10 |

| Type / Cat. No. | Imax | Standard Pack |
|---|---|---|
| JX4/2 | 32 A | 100 |
| JX4/3 | 32 A | 50 |
| JX4/4 | 32 A | 50 |
| JX4/5 | 32 A | 50 |
| JX4/6 | 32 A | 50 |
| JX4/8 | 32 A | 10 |
| JX4/10 | 32 A | 10 |
| JX4/16 | 32 A | 10 |

| Type / Cat. No. | Imax | Standard Pack |
|---|---|---|
| JY6/2 | 35 A | 100 |
| JY6/3 | 35 A | 50 |
| JY6/4 | 35 A | 50 |
| JY6/5 | 35 A | 50 |
| JY6/6 | 35 A | 10 |
| JY6/7 | 35 A | 10 |
| JY6/8 | 35 A | 10 |
| JY6/10 | 35 A | 10 |
| JYS6/2.5 | 24 A | 20 |

| Type / Cat. No. | Imax | Standard Pack |
|---|---|---|
| JY10/2 | 50 A | 20 |
| JYS10/2.5 | 24 A | 20 |